SPECIFICATION OF
ANALOG MEMS MICROPHONE

(Little Compact Bottom Port)

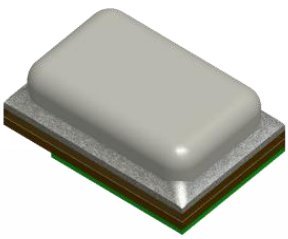

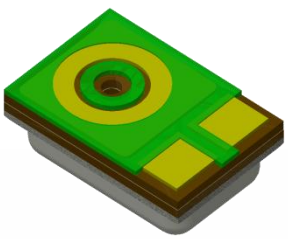

MODEL NO. : F1-(A)MOE-N090R38-3P

DIRECTIVITY : OMNI-DIRECTIONAL
SOUND PORT : BOTTOM PORT TYPE
DATE : 2014. 08. 01

		Prepared	Checked	Checked	Approved
USER	Name				
	Sign				
		Prepared	Checked	Checked	Approved
BSE	Name	Y.H.Shim		S.H.Lee	M.J.Lee
	Sign				

HF
BFRs/CFRs/PVC - Free

※ Halogen Free

BSE CO., LTD

58B-4L, 626-3, GOZAN-DONG, NAMDONG-KU
INCHON-SI. KOREA
TEL :(8232) 550-1780
FAX :(8232) 554-6206

4 0 5 - 8 1 7

SPECIFICATION HISTORY

Version	Date	Comments
1.0	Oct. 07. 13	1ST Submission of Electro-Acoustical specification
1.1	Apr. 20. 14	Changed Electrical Characteristics
1.2	Jul. 01. 14	Changed Electrical Characteristics
1.3	Aug. 01. 14	Added the image of Microphone

1. INTRODUCTION

This specification is for the SMD possible Analog MEMS (Bottom port) Microphone which has endurable reflow temperature of up to 260℃ for over 15 seconds.

2. MODEL NO.

F1-(A)MOE-N090R38-3P

3. ELECTRICAL CHARACTERISTICS

Temp. = 23 ± 2 ℃ Room Humidity = 65 ± 5 %

NO.	Parameter	Symbol	Condition	Limits			Unit
				Min.	Center	Max.	
1	Directivity			Omni-directional			
2	Supply Voltage	Vdd		1.5	2.0	3.6	V
3	Sensitivity	S	Vdd=2.0V, 94dBSPL at 1kHz	-41	-38	-35	dBV/Pa
4	Output impedance	ZOUT	94dBSPL at 1kHz	-	-	400	Ω
5	Current Consumption	IDD	Vdd=2.0V	50	-	100	μA
6	Signal to Noise Ratio	S/N	94dBSPL at 1kHz, A-weighted	-	62.5	-	dB(A)
7	Sensitivity Change across Voltage		Vdd=1.5V ~ 3.6V	No Change			dB
8	Power Supply Rejection Ratio	PSRR	200mVp-p sine wave at 1kHz, Vdd=1.8V	-	75	-	dB
9	Power Supply Rejection	PSR	100mVp-p square wave at 217Hz, Vdd=1.8V, A-weighted	-	-110	-	dBV(A)
10	Total Harmonic Distortion	THD	94dB SPL at 1kHz	-	0.2	0.3	%
11	Acoustic Overload Point	AOP	10% THD at 1kHz	121	-	-	dB SPL
12	DC Output Voltage		Vdd= 1.5V~3.6V	-	1.10	-	V
13	Start-up time			-	-	100	ms

4. MEASUREMENT CIRCUIT

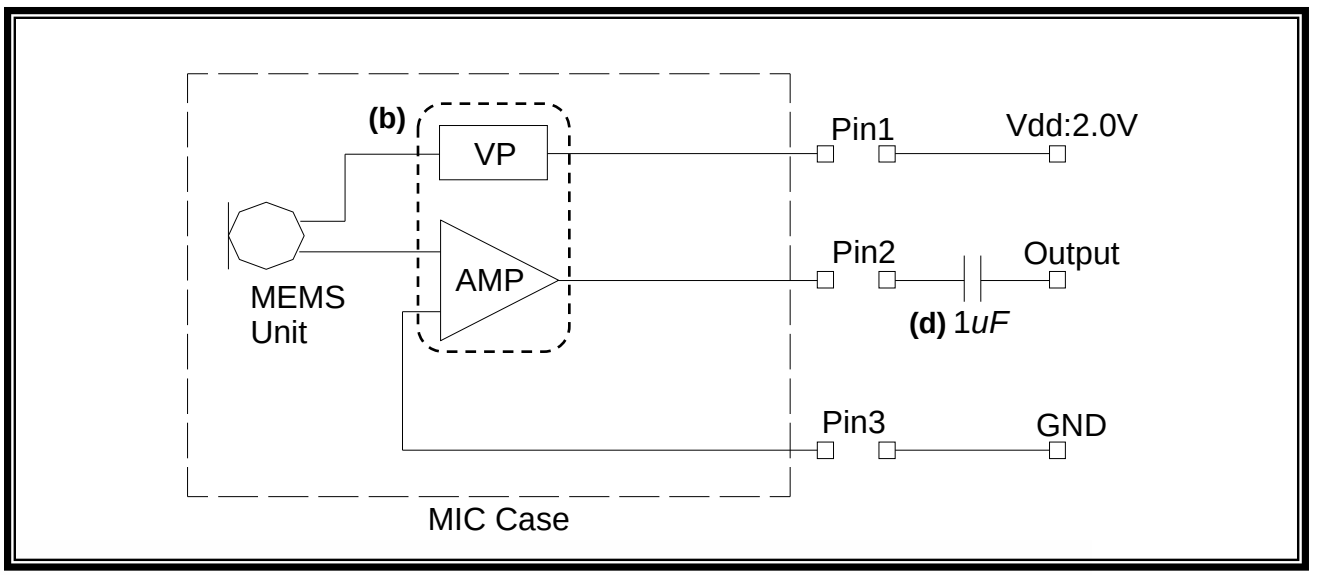

ⓐ **MEMS Unit** : Membrane & Back Plate (transmit the electric signal modified from sound signal to ASIC)

ⓑ **ASIC** : Impedance converter (Mechanical Signal → Electric Signal)

ⓒ **Vdd** : Power Supply (Operation of ASIC)

ⓓ **Rectifier Capacitor** : Removed Direct Current Factor

ⓔ **Output** : Output Signal of Microphone's Sensitivity

ⓕ **GND** : Ground

5. RECOMMENDED INTERFACE CIRCUIT

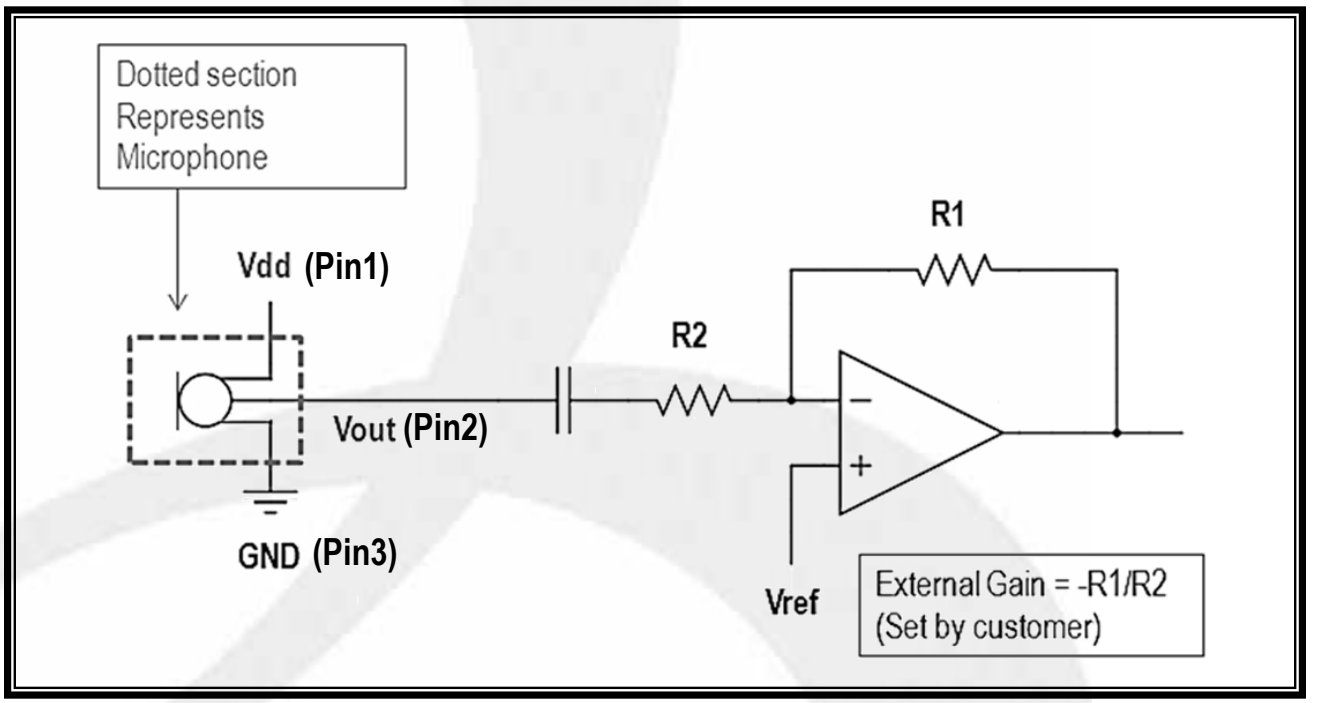

6. TYPICAL FREQUENCY RESPONSE CURVE (FAR FIELD)

Far Field Measurement Condition
Temperature : 23 ± 2 ℃
Supply Voltage : 2.0V
Acoustic stimulus : 1Pa (94㏈ SPL at 1㎑) at 50 ㎝ from the loud-speaker.
The loud-speaker must be calibrated to make a flat frequency response input signal.
Position : The frequency response of microphone unit measured at 50㎝ from the loud-speaker

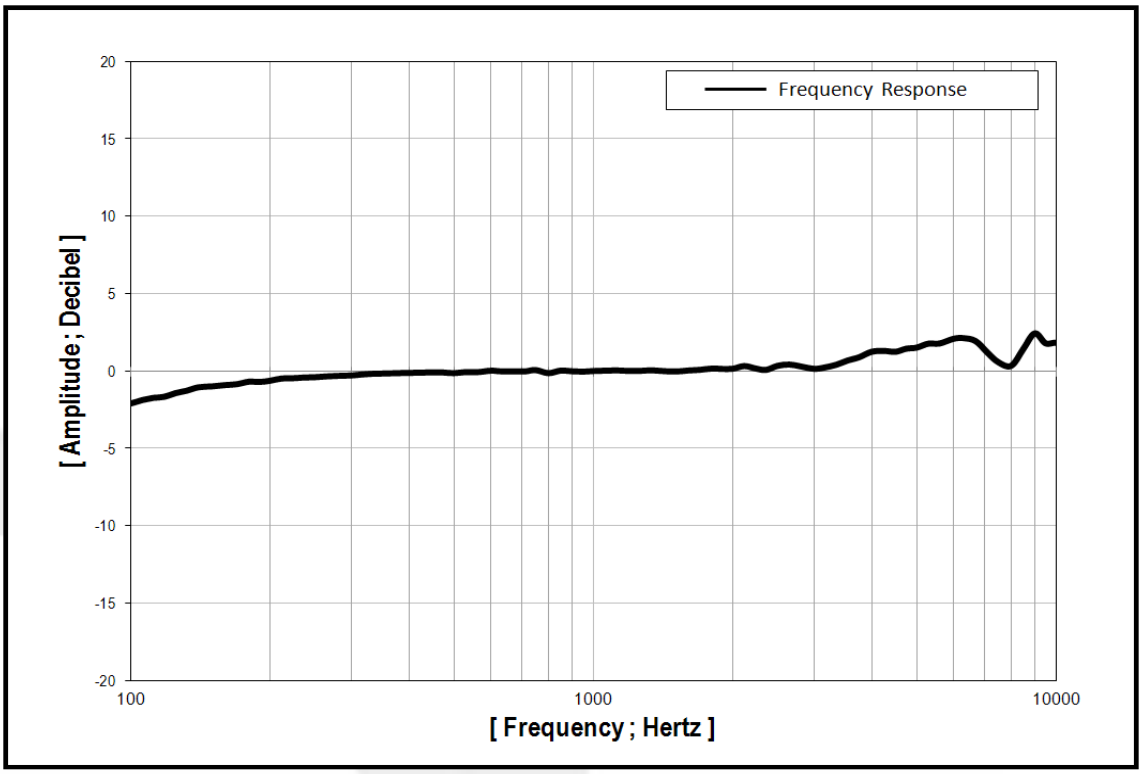

7. MECHANICAL CHARACTERISTICS

※ PCB design & Pin size can be changed by model No.

■ SMD Type

F1-(A)MOE-N090R38-3P

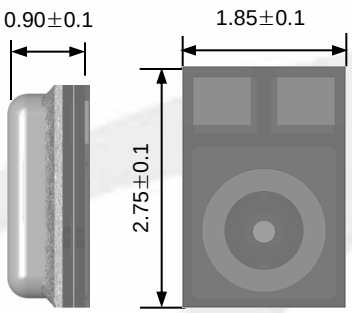

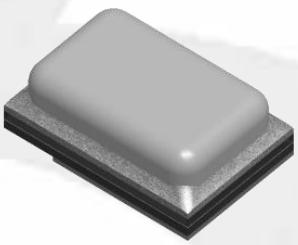

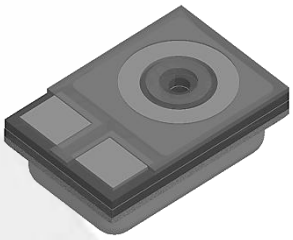

- Mechanical dimensions, Land Pattern

Dimensions (Unit : mm)

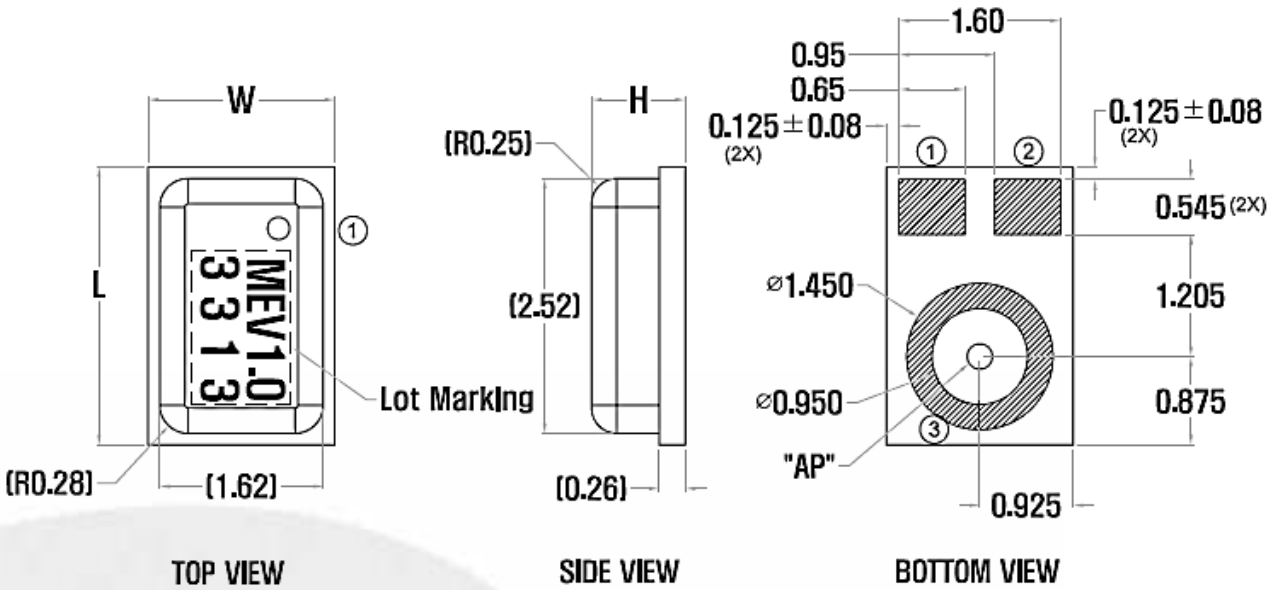

Item	Dimension	Tolerance (+/-)	Units
Length (L)	2.75	0.10	mm
Width (W)	1.85	0.10	mm
Height (H)	0.90	0.10	mm
Acoustic Port (AP)	Φ 0.25	0.05	mm

Pin #	Pin Name	Type	Description
1	Vdd	Power	Power Supply
2	Output	Signal	Output Signal
3	GND	Ground	Ground

- Mechanical dimensions, Land Pattern

Recommended

PCB land pattern

(Unit : mm)

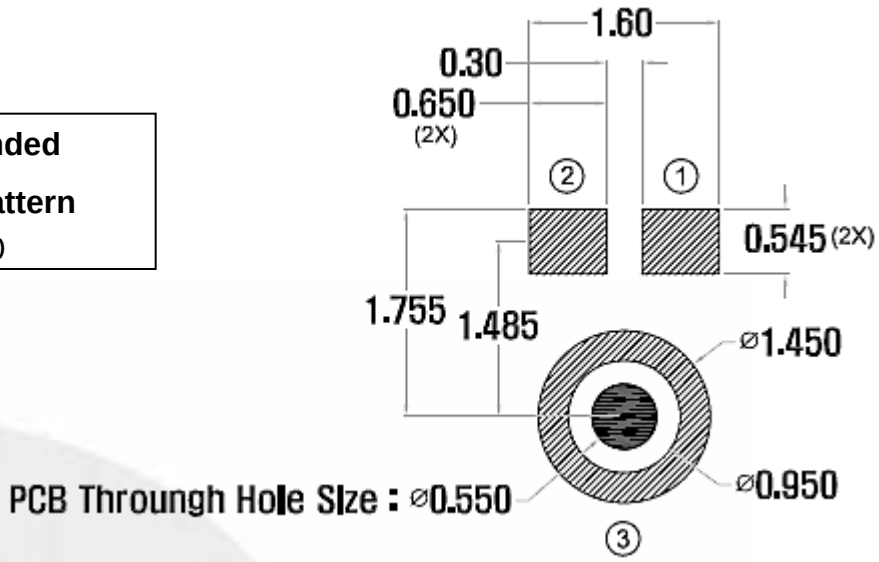

Recommended

solder stencil pattern

(Unit : mm)

(thickness of metal mask: 0.10T)

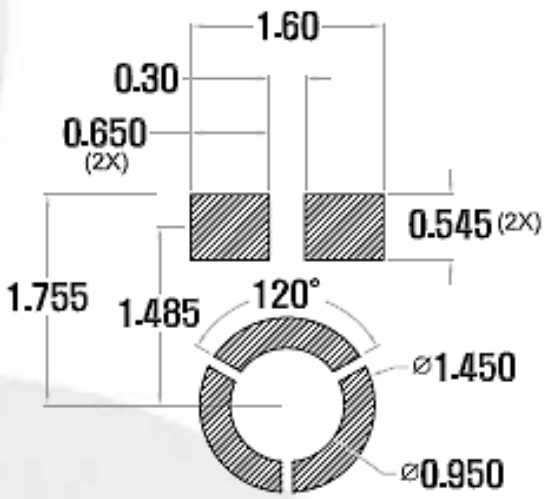

8. Packaging Specification

- Reel

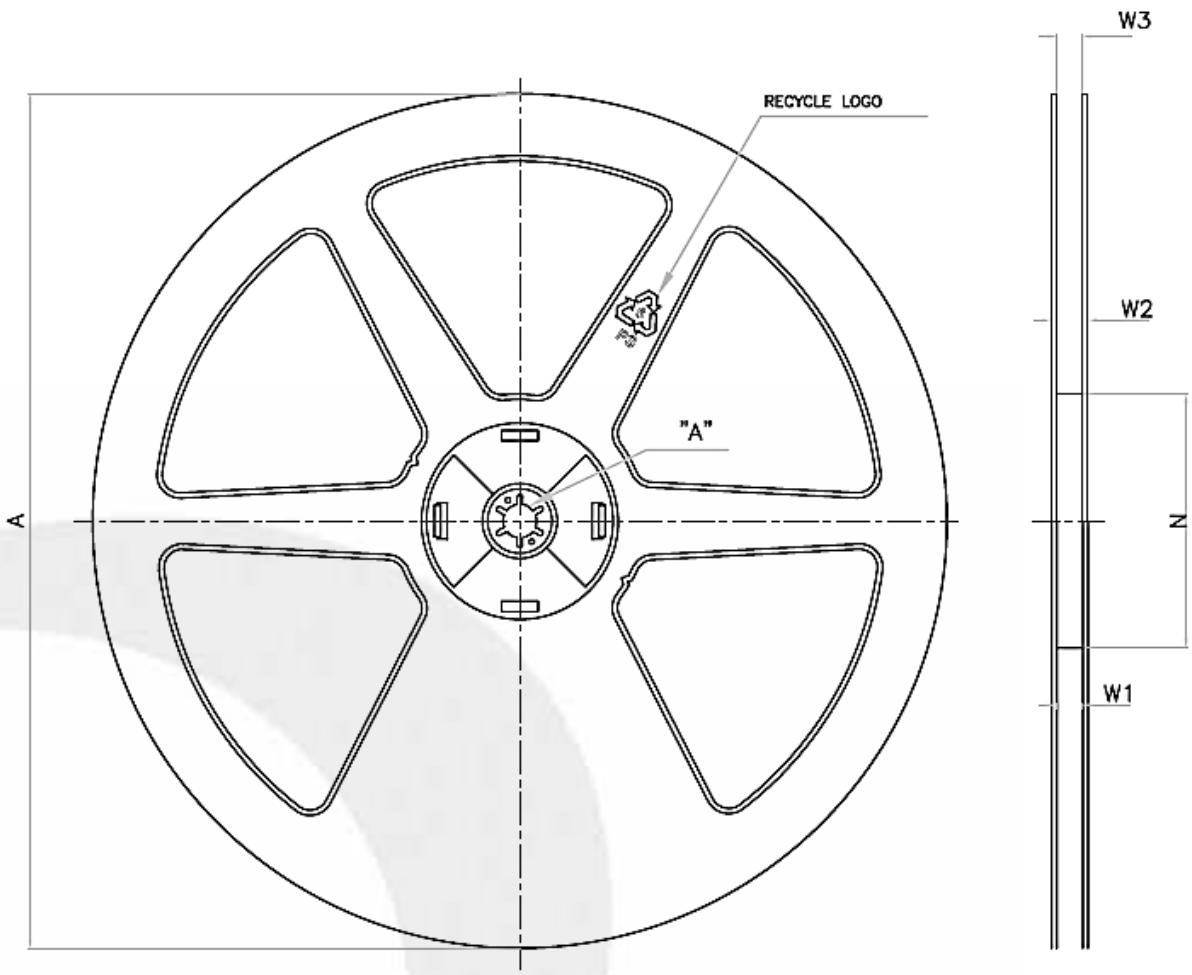

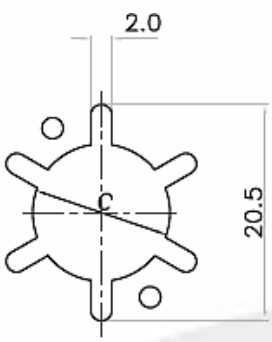

DETAIL OF "A"

(Unit : mm)

WIDTH	A	N	W1	W2	W3	C
12mm	$330^{+2.0}_{-2.0}$	$80^{+3.0}_{-1.0}$	$12.4^{+3.0}_{-0.0}$	$16.4^{+2.0}_{-2.0}$	$13.6^{+2.0}_{-2.0}$	$13^{+0.5}_{-0.2}$

• 13” reel will be provided for the mass production stage

8. Packaging Specification

- Taping

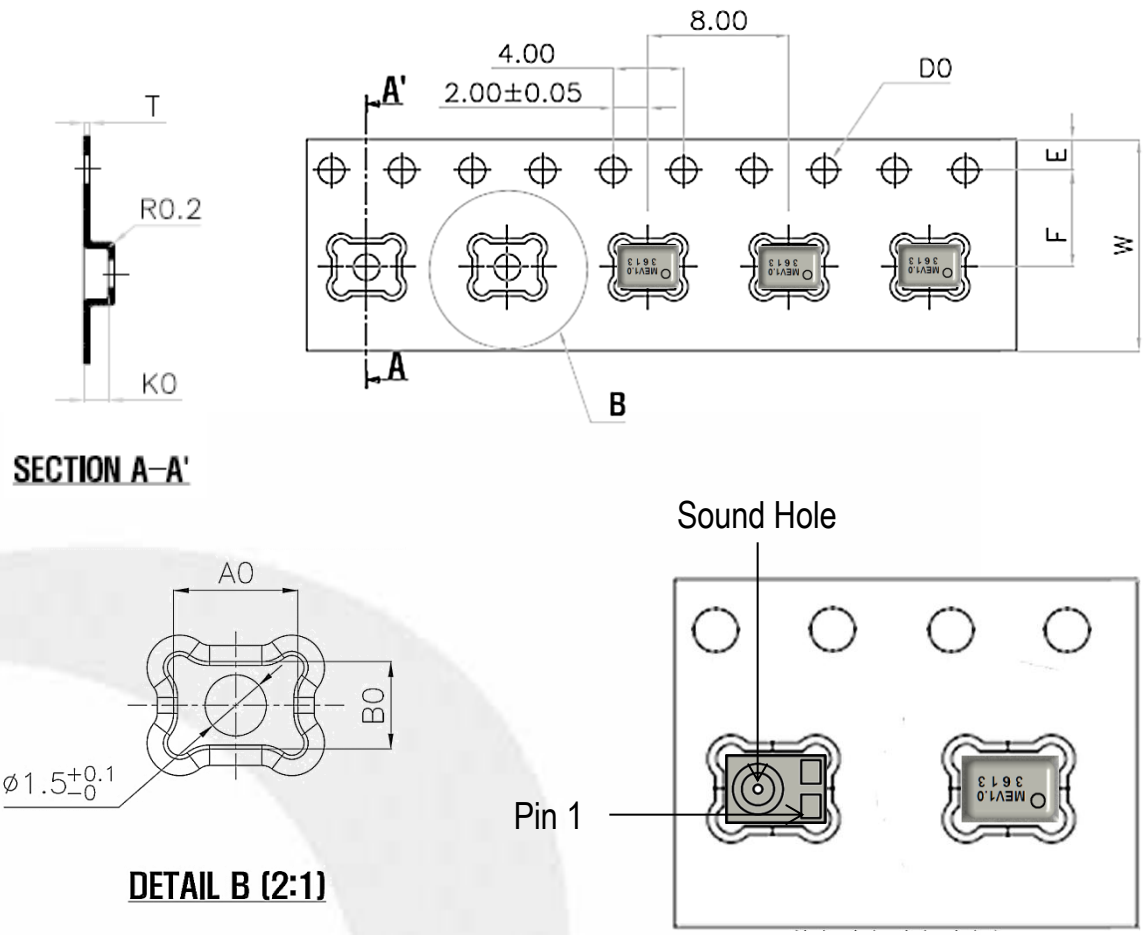

[Note]
1. Direction of parts : See above pictures.
2. Microphone total quantity (13" Reel) : 5,900pcs
3. ESD : 10^2~$10^{10}\Omega$
4. Carrier Tape Material & Color : PS, Black
5. Thermo Compression Bonding

Unit : mm

A0	3.05±0.10	E	1.75±0.10
B0	2.15±0.10	F	5.50±0.05
K0	1.10±0.10	T	0.30±0.05
D0	1.50±0.10	W	12.00±0.30

8. Packaging Specification

- Packing

Inner Box spec.

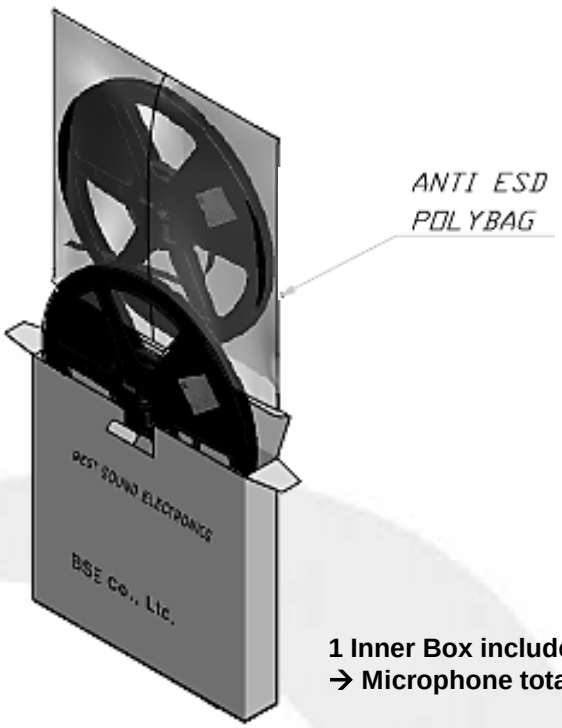

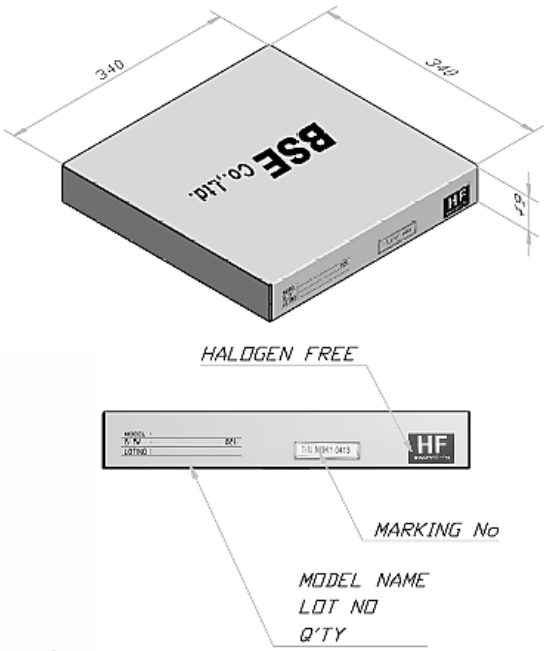

1 Inner Box included 2 reels
→ Microphone total quantity : 11,800 pcs

Outer Box Spec.

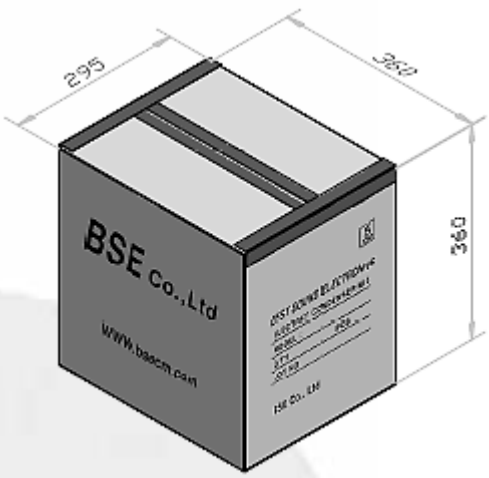

1 Outer Box included 5 Inner Boxes
→ Microphone total quantity : 59,000 pcs

9. RELIABILITY TEST CONDITIONS

Note : After test conditions are performed, the sensitivity of the microphone shall not deviate more than ±3dB from its initial value.

TEST	DESCRIPTION
TEMPERATURE STORAGE	[High Temperature Storage] +70±2℃ environment for 200 hours. (The measurement to be done after 2 hours of conditioning at room temperature)
	[Low Temperature Storage] -25±2℃ environment for 200 hours. (The measurement to be done after 2 hours of conditioning at room temperature)
HUMIDITY	+70±2℃ and 95±2%RH environment for 200 hours. (The measurement to be done after 2 hours of conditioning at room temperature)
TEMPERATURE CYCLE	5 cycles of temperature change. +70±2℃ for 1hr, at 20±2℃ for 30 min, at -25±2℃ for 1hr (The measurement to be done after 2 hours of conditioning at room temperature)
THERMAL SHOCK	20 cycles of temperature change. from –40℃ to 85℃ for 2hr Changing time about 5 min (The measurement to be done after 2 hours of conditioning at room temperature)
HIGH TEMPERATURE AND HUMIDITY	+85±2℃ and 85±2%RH environment for 120 hours. (The measurement to be done after 2 hours of conditioning at room temperature)
ESD (Electrostatic Discharge)	HBM (Human Body Model) : 2kV Expose 10 Times. MM (Machine Model) : 0.2kV Expose 10 Times. CDM (Charged Device Model) : 0.5kV Expose 10 Times.
VIBRATION	To be no interference in operation after vibrations. 10㎐ to 55㎐ for 1 minute full amplitude 1.52㎜ , for 2 hours at three axes
DROP	To be no interference in operation after dropped to steel floor 12 times from 1.5 meter height in state of packing
REFLOW SENSITIVITY	5 reflow cycles. Refer to reflow profile from specification item 11.

10 . TEMPERATURE CONDITIONS

10.1 STORAGE TEMPERATURE : -40℃ ~ +100℃

10.2 OPERATING TEMPERATURE : -40℃ ~ +100℃

11. MEASUREMENT SYSTEM

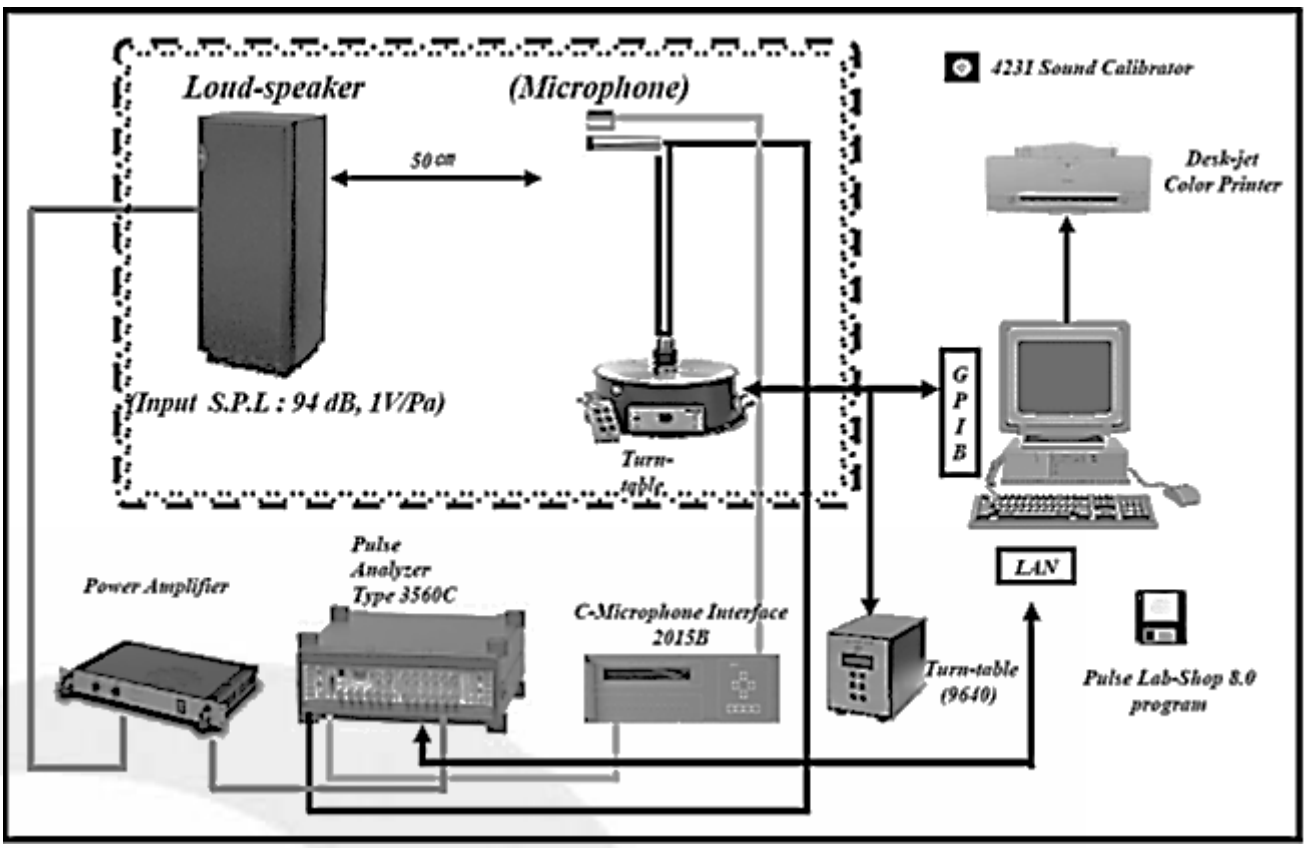

11.1 Measurement Condition

(a) Supply voltage : 2.0V
(b) Acoustic stimulus : 94㏈ SPL at 1㎑
(c) Distance between MIC & SPK : 50㎝
(d) Measurement frequency : 50 (㎐) ~ 20 (㎑)

Machine	Model No	Purpose
Standard MIC	4191	Revision of input signal & SPK spec
Pulse Analyzer	3560C	Electric-Sound Signal occurrence and analysis
C-Microphone Interface	BK2010	Voltage & impedance supply to MIC
Power Amplifier	2716C	Input Signal amplifying purpose
Turn Table	5997	MIC directionality Test purpose
Loud Speaker	GRF Memory HE	SPK (Input sound Signal occur)
Operating Software	Lab-Shop 13.0	Machine control Software
Sound Level Calibrator	4231	Standard MIC Calibration purpose

12. SOLDER REFLOW PROFILE

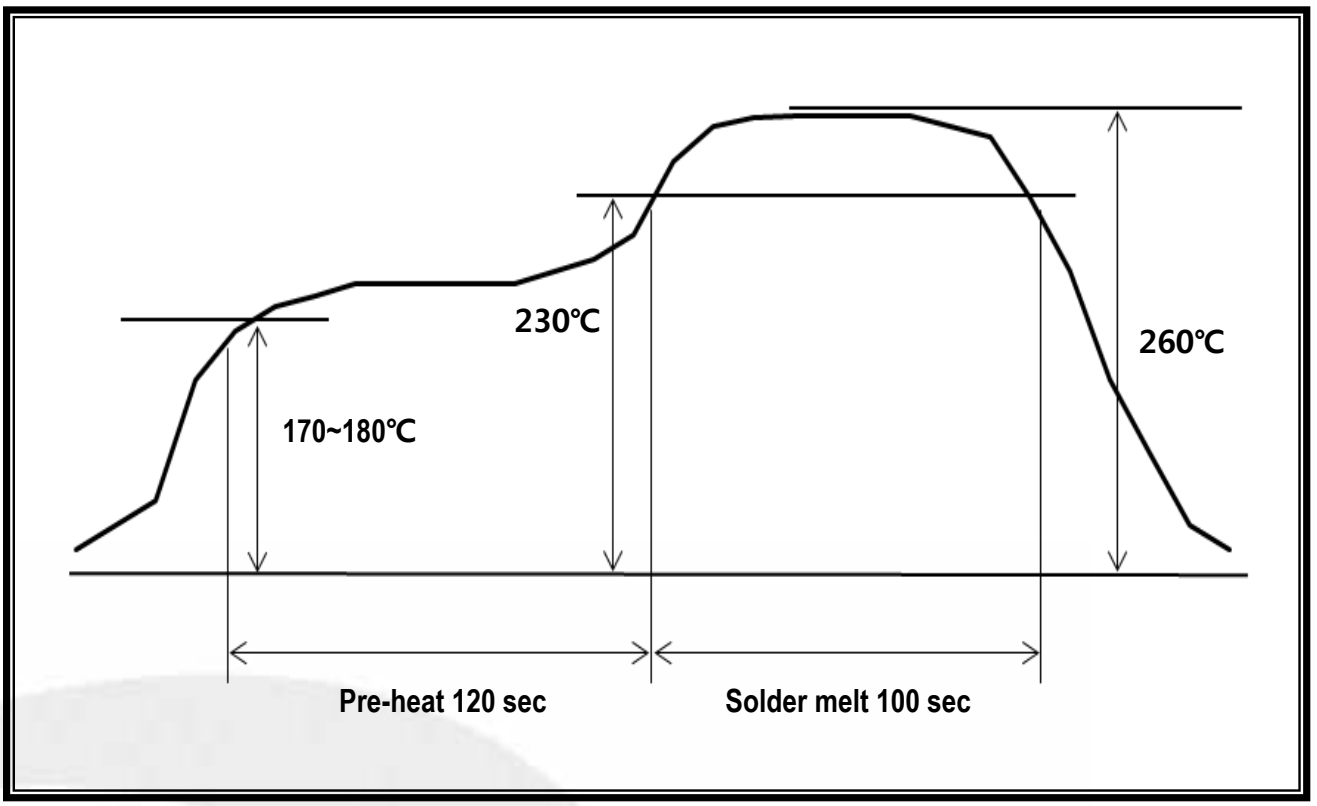

Stage	Temperature Profile	Time (maximum)
Pre-heat	170~180 ℃	120 sec
Solder Melt	Above 230 ℃	100 sec
Peak	260 ℃ maximum	30 sec

[Notes]

1. Do not pull a vacuum over the port hole of the microphone. Pulling a vacuum over the port hole can damage the device.
2. Do not board wash after the reflow process. Board washing and cleaning agents can damage the device. Do not expose to ultrasonic processing or cleaning.
3. Recommend no more than 5 cycles.
4. Shelf life : Twelve(12) months when devices are to be stored in factory supplied, unopened ESD moisture sensitive bag under maximum environmental condition of 30℃, 70% R.H.
5. Exposure : Devices should not be exposed to high humidity, high temperature environment. MSL (Moisture sensitivity level) Class 2a.
6. Out of bag : Maximum of 90 days of ESD moisture sensitive bag, assuming maximum conditions of 30℃, 70% R.H.

13. Recommended Pick-up nozzle

13.1. Nozzle material : Metal or Rubber, Etc.

13.2. Case Weight

- **If tool outer size is bigger than MIC. : Max. 10N**
- **If tool outer size is smaller than MIC. : Max. 4N**

13.3. Nozzle position : MIC Center

- **Nozzle inner diameter size : Max. Ø0.92**

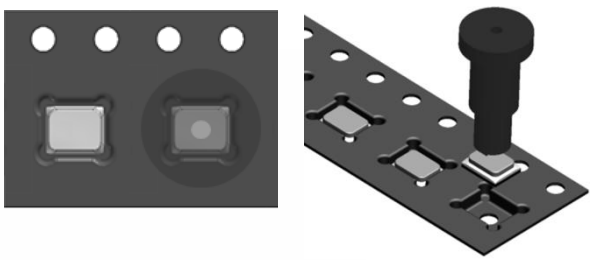

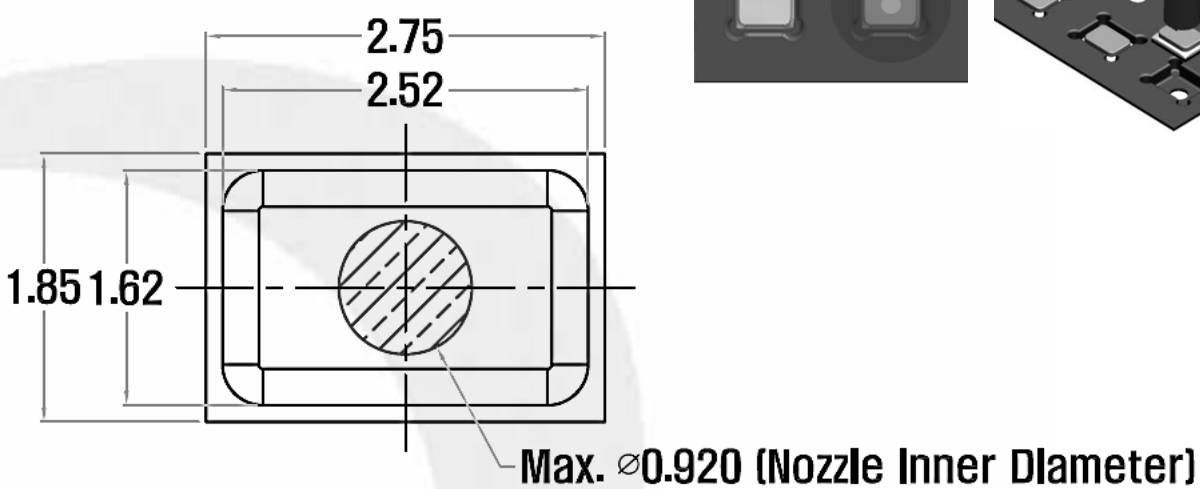

14. HANDLING GUIDE

14.1. Handling Guide of Cleaning & Foreign Matter

* Note 1. No Liquid or/and gas should be used for washing / cleaning.
* Note 2. No board washes should be applied after reflow
* Note 3. No foreign matter should be exposed interior microphone during cleaning or washing. if cleaning or washing is applied unavoidably, It must do additional prevention in area of "Microphone sound hole" to avoid foreign matter.(ex. Attached protective tape)
* Note 4. No seal sound hole of microphone should be applied during reflow process
* Note 5. No ultrasonic cleaning should be applied in case of microphone unit itself or/and after installed microphone onto board.
* Note 6. Do no reuse microphone which is defect during SMD.
  Do no wash or clean to reuse microphone which is defect during SMD.

De-cap View of Good part

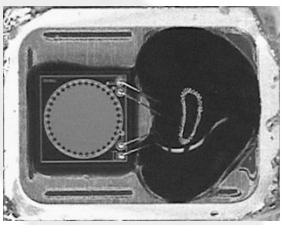

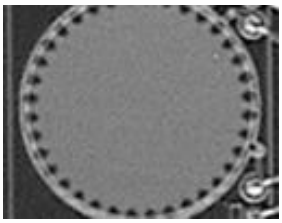

► Example) De-cap View of the NG Microphone

Reflow after sealing of Sound Hole

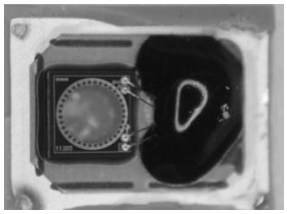

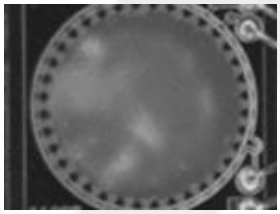

Defect view NG MIC by Pick-up

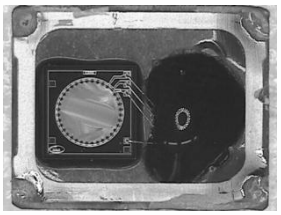

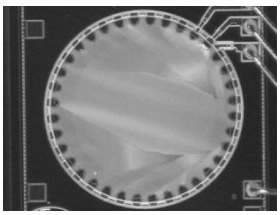

Defect view NG MIC by ultrasonic cleaning

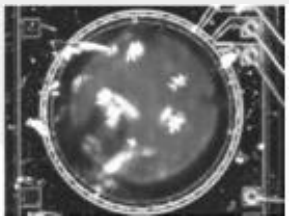

Defect view NG MIC by liquid foreign matter

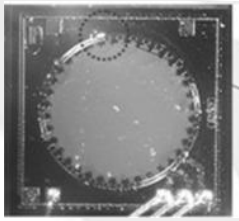

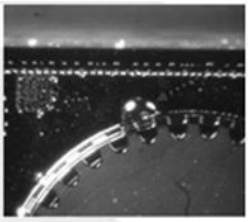

14. HANDLING GUIDE

14.2. Handling Guide of Care of Board Routing & Cutting

* Note 1. Do work maximum distance with microphone and minimum speed machining setting during Board Routing & Cutting
* Note 2. Do not wash or clean "Board" after Board Routing & Cutting
* Note 3. Do additional prevention in area of "microphone sound hole" to avoid foreign matter(ex. Attached protective tape) during Board Routing & Cutting
* Note 4. Do not use strong air flow directly in order to remove foreign matter should be applied in microphone
* Note 5. Do preventive action in area of "microphone sound hole" to avoid foreign matter(ex. Attached protective tape) or air .
(ex. Block "Microphone sound hole" by hands as below picture)

► **Example) Air Blowing Condition**

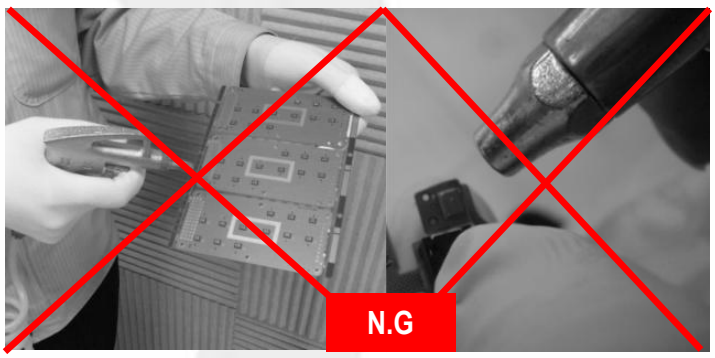

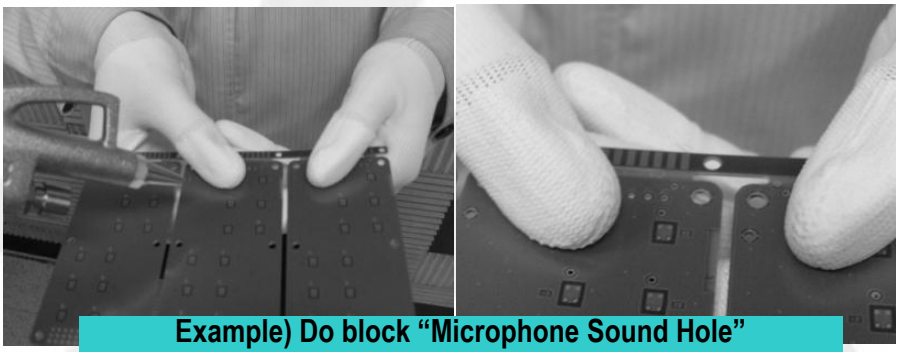

Example) Do block "Microphone Sound Hole" by hands during air blow

14. HANDLING GUIDE

14.3. Inspection by X-Ray

* Note 1. Do inspect X-Ray after SMD.

It is different X-Ray condition by applied SMD company.

15. REWORK

15.1. Recommended Heater Gun Specification

Manufacturer		**HAKKO**
Model		**850B ESD**
Temperature control		100 ~ 420
Top heater	Type	Hot air flow
	Flow rate	< 23 ℓ/min
Alignment		visual
Pick-up		Manual
Solder/flux		1. Removing or pre-heating the solder residue before mounting new part 2. Apply lead-free flux only or apply 2 ~ 3 points of solder paste instead

15.2. Recommended Heater Gun Setting Condition

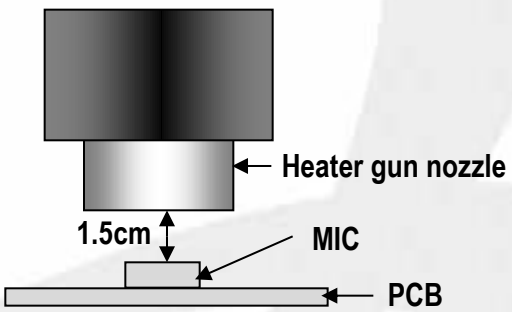

Heater gun setting Temperature		300 ℃ ~ 400 ℃
Nozzle & MIC. Length		1.5 cm
Flow setting		2.0 ~
Alignment		Visual
Pick-up		Manual
Working Time	Remove	10 ~ 20 sec
	SMD	10 ~ 20 sec

* Note 1. According to the material & thickness & counts of layer for PCB, this condition will be change.

* Note 2. According to Rework M/C & Worker, this condition will be change.

15. REWORK

15.3. Rework Process Condition (using Heater Gun)

Bottom Heater	Recommend IR heater.
Alignment	Use magnifier for alignment. Note : it may difficult to do alignment by naked visual because MIC pad is located on soffit.
Temperature	Recommend temperature is "300℃".
Time	It is the optimized working process of 1.0 ~ 2.0mm board for 10~20sec under 300℃ temp.
Nozzle	Use heater gun without nozzle
Solder/flux Process Options	1. Removing the solder residue before mounting new part - print Halogen-free solder paste on the SMD MIC terminals using mask → mounting
	2-1. Pre-heating the solder residue before mounting new part - apply Halogen-free flux onto the land pattern
	2-2. Pre-heating the solder residue before mounting new part - apply 2 ~ 3 points of Halogen-free solder paste onto the land pattern
	3. Highly recommendation process for rework. - After remove defect parts without Pre-heating, It is used Halogen-free flux or 2~3 points of Halogen-free solder. (It is most effective and fast for rework)

15. REWORK

15.4. Handling of Rework

* Note 1. Follow standard guide line of SMD company for Rework Condition

* Note 2. Rework conditions may variable by SMD companies' circumstance and working condition.

* Note 3. Do Not reuse defect microphone by SMD process.

* Note 4. Do not employ chemical board wash or cleaning, as the associated cleaning agents (such as liquid or air) can damage the device.